2008

SEPTEMBER 9, 2008

Walls and Fences on Major Roadways

A Guide to Design, Construction and Repair for Homeowners

Fremont

Prepared by Metropolitan Planning Group

TABLE OF CONTENTS

INTRODUCTION 1
GOALS 1
BACKGROUND 2
STUDY 7
REPAIR AND PRESERVATION 7
RECOMMENDATIONS 8
DESIGN STANDARDS AND APPLICATION 9
1. Proactive Reinforcement 9
2. Surface Damage Only 10
3. Column/Post Failure 12
4. Panel Damage or Failure 13
   a. Precast walls to match existing walls 14
   b. Replacement with compatible wood fences 14
   c. Wood framing with approved exterior siding 15
   d. Stucco replacement walls where appropriate 16
   e. Block walls where appropriate 17
5. Landscape adjacent to the right-of-way 18
APPENDIX A – BEFORE HIRING A FENCE CONTRACTOR A1
APPENDIX B – A DO IT YOURSELF REPAIR GUIDE B1
APPENDIX C – PRECAST SOUND WALL REPAIR C1
APPENDX D – HOW TO FIND A WALL/FENCE CONTRACTOR D1

INTRODUCTION

Many of Fremont's residential neighborhoods were built with precast walls or fences physically separating them from the abutting arterial roadways. These walls were installed by developers as private property improvements. Homeowners own the sections of the walls on their parcels and are responsible for maintaining these walls.

The City of Fremont owns the right-of-way adjacent to these walls, these walls are not like the "good-neighbor fences" that divide two residential properties. Although the City is the adjoining landowner, the public right-of-way is intended for open public use, and therefore the City has no responsibility to "fence off" or enclose its right-of-way. The City does not have a program to assist with maintaining, repairing, or replacing these walls and fences, except for painting over graffiti.

The purpose of this design guide is to maintain Fremont's aesthetic qualities as experienced from major boulevards and parkways. The specific designs included are intended to achieve a high degree of consistency along rights-of-way by offering a range of options, minimizing property owner cost, and providing clear and simple instructions in order to enable timely repairs.

GOALS

The Goals of this Guide are to:

- Improve the appearance of the City's major roadways, parkways and City gateways.
- Establish standards for future wall/fence repairs or replacements.
- Encourage co-operative repair/replacement among neighbors.
- Reduce hazards created by deteriorating or collapsed precast walls.
- Eliminate unsightly fence replacements and those with dissimilar materials, heights and colors.
- Enhance neighborhoods by maintaining a planned, uniform, and attractive appearance.
- Have uniform sound-wall and fence designs along specific roadway segments.

BACKGROUND

Some of the existing sound walls built along the City of Fremont's major arterials are reaching the end of their useful life and need to be replaced.

In order to preserve the value, integrity and appearance of Fremont neighborhoods, the City adopted an Ordinance in 2005 which recognized dilapidated fences along major roadways as public nuisances. The City Council expanded the definition of Nuisance (Section 4-9115 of the Municipal Code) which created the authority to determine when hazardous, dilapidated, mismatched or otherwise blighted fences should be repaired or replaced. The Council further directed staff to develop specific guidelines for homeowners in an effort to maintain compatibility with the existing fences and walls on major roadways.

The map on the next page shows key locations of back-up fences and walls along some of Fremont's major roadways.

BACK-UP FENCE AND WALL LOCATIONS MAP

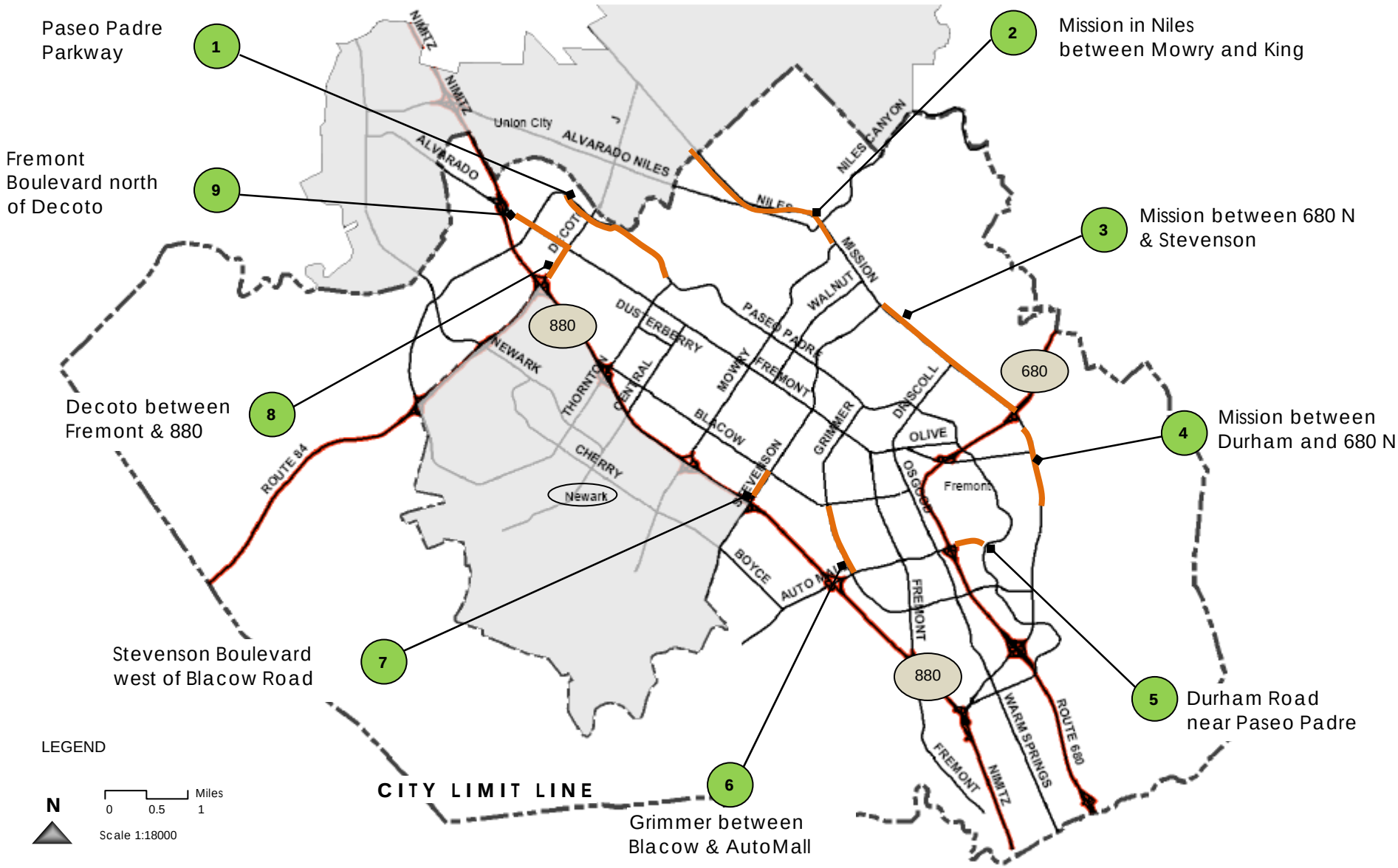

Figure 1: Key Back-up Fence and Wall Locations

Paseo Padre Parkway

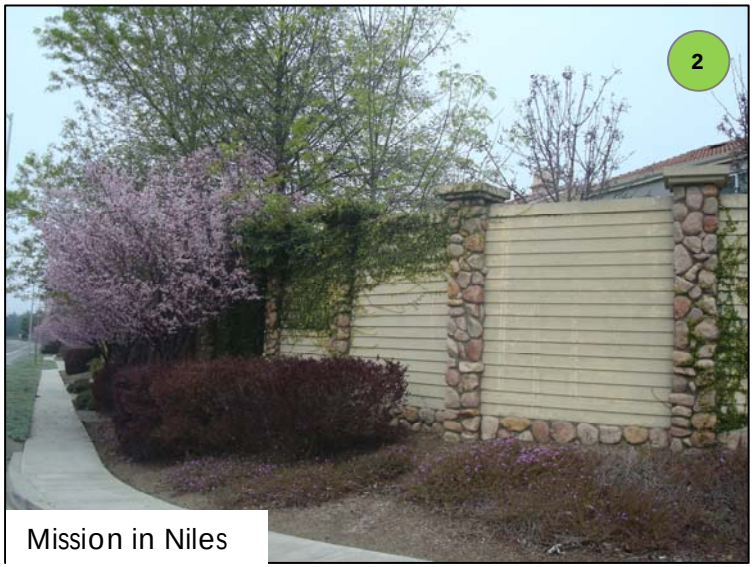

Mission in Niles

Mission Boulevard between 680 N & Stevenson

1. Precast concrete wall with adobe brick pattern and steel posts and wood pilasters
2. Concrete fence boards with concrete caprail and cobblestone river rock pilaster
3. Precast wall with concrete caprail, "bouquet canyon" stone veneer and sculptured concrete columns

Examples of back-up Fence and Wall locations - Photos

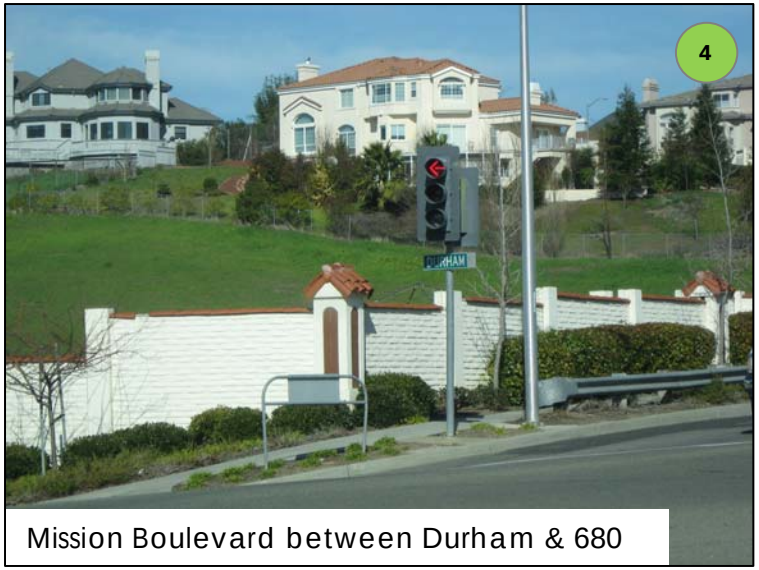

Mission Boulevard between Durham & 680

Durham Road near Paseo Padre

Grimmer Road

4 Precast walls with adobe pattern block, barrel tile cap and concrete pilaster with recessed arch

5 Precast wall with concrete caprail, "bouquet canyon" stone veneer and sculptured concrete columns

6 Modified board on board fence design with concrete block columns

Examples of back-up Fence and Wall locations - Photos

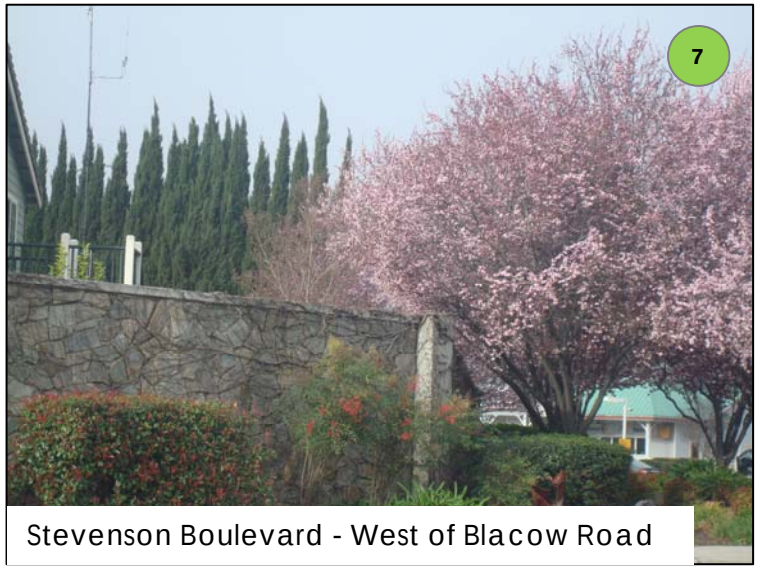

Stevenson Boulevard - West of Blacow Road

Decoto Road

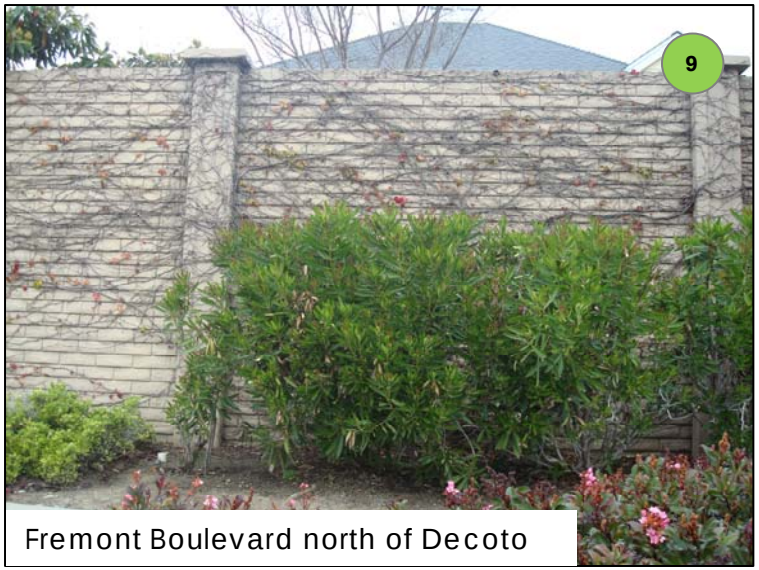

Fremont Boulevard north of Decoto

7 Precast wall with concrete caprail, "bouquet canyon" stone veneer and sculptured concrete columns

8 Precast wall with concrete caprail, "bouquet canyon" stone veneer and sculptured concrete columns

9 Precast concrete wall with adobe brick pattern, and concrete columns landscaped with Boston Ivy vines

Examples of back-up Fence and Wall locations - Photos

STUDY

A survey of the existing fences and precast walls along Fremont's major roadways indicates a variety of designs. These vary from simple wood fences, wood fence sections with brick or concrete columns, small-brick sections with wood columns, precast, adobe block, stuccoed walls or stone veneer walls with concrete columns.

Key issues identified with some of the precast walls and wood fences are as follows:

- Some fences show signs of age and wear such as structural imperfections, cracking, buckling, and missing decorative elements.
- Other fences have been repaired or replaced with different fence styles and materials at different heights than the original design.

In addition, many precast walls have begun to fail. This situation has occurred mainly due to the steel posts that structurally support the walls rusting through, resulting in leaning walls that ultimately fall. Any condition that adds or traps moisture near the bottom of precast walls contributes to the rusting, causing failure.

REPAIR AND PRESERVATION

Homeowners are encouraged to reinforce these walls/fences before they fail. Even after they fail, many precast wall sections remain intact and may be able to be re-used with new supporting posts. Potential repair can include: adding a concrete pilaster around the existing posts of precast walls, or other solutions that would achieve similar results. Wood fence repairs can be done using metal braces called fence-post-repair brackets to repair leaning wood posts. Minor repair solutions include the use of a 2x4 scrap or galvanized steel T-braces to repair wood fence rails. Sample illustrations of each of these repair solutions are provided in the appendices of this document.

RECOMMENDATIONS

The City of Fremont has adopted the following recommendations for repair and replacement of walls and fences. These recommendations are presented in order from minor to major repairs.

The City recommends that the first step in the process be proactive reinforcing of aged deteriorating fence posts before they fail. The pattern of recent failures indicates a trend of increased steel fence post failure.

If a wall or fence is already showing signs of deterioration, the homeowner should assess the level of damage or disrepair and make repairs to the existing fence or wall when possible. If the structural damage is repairable then the homeowner should repair the wall or fence replacing damaged or old portions of the fence or walls needed. When the damage is substantial the homeowner should consider replacement options. The first replacement option should be to replace the fence or wall with an in-kind replacement of the precast wall or compatible wood fence to match the originally installed design.

The following is a summary of the recommended fence options which will be discussed on the following pages:

1. **Proactive Reinforcement:** Use pre-approved designs to reinforce and save walls/fences before they collapse.
2. **Surface Damage only:** Repair minor surface damage to existing walls and fences.
3. **Column/Post Failure:** Repair walls with pre-approved repair detail for columns.
4. **Panel Damage or Failure:** Replace walls and fences using:
   a. Precast walls to match existing walls (preferred solution)
   b. Replacement with compatible wood fences (if allowed by entitlement/tract conditions of approval and approved by Planning Division)
   c. Wood framing with approved exterior siding
   d. Stucco replacement walls where appropriate
   e. Block walls where appropriate.
5. **Landscape adjacent to the right-of-way.**

DESIGN STANDARDS & APPLICATION

The design standards and application provided in this section are intended to assist homeowners to assess the type of damage of their walls/fences and apply the respective solutions. While some minor repairs can be done by the homeowners themselves, major repairs require hiring a contractor.

Appendix A provided at the end of this document provides a checklist for the homeowner before hiring a contractor.

1. Proactive Reinforcement

Homeowners can use pre-approved designs to reinforce and save walls/fences before they collapse. They can assess the condition of their walls/fences at an early stage to determine if they can prevent their walls/fences from falling over. This method of reinforcement could potentially save the homeowner from additional costs that could occur if the wall/fence were to totally collapse as well as prevent future hazards from walls/fences falling over. The pre-approved designs provided in this document can be used for walls with column/post failure as well as for wood fences that are failing. Sample illustrations of some of the repair solutions for both precast walls and wood fences are attached in the appendices of this document. Homeowners are encouraged to complete a yearly visual inspection of their walls/fences.

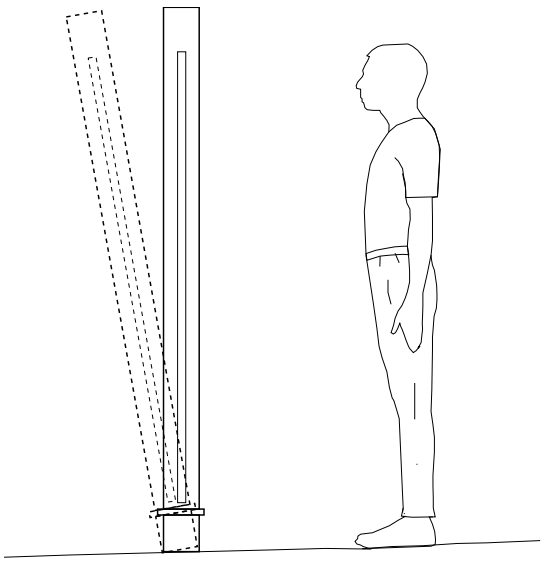

Figure 2: Check for leaning fences

Check for leaning walls/fences by looking down the length of the wall/fence, not by standing facing the wall.

Please visit the Fremont Development Center at 39550 Liberty Street or call 510.494.4460 to ask if a building permit is required for any of your repair work. The City of Fremont's Fence permit requirements can be found on the City's website:

https://fremont.gov/561/Fence-Permit

DESIGN STANDARDS & APPLICATION

By applying surface treatment to precast walls and wood fences, compatibility in materials and design can be achieved. This will give a consistent look along the City's streetscape.

2. Surface Damage only

Homeowners can update the surfaces of existing walls and fences that have minor damage, discoloration, vandalism, and minor structural damage by cleaning, repairing, resurfacing and painting with appropriate colors in order to match the original materials and design. This ensures a consistent look along the streetscape. Also, the City of Fremont's Graffiti Abatement Program assists homeowners with the clean up of graffiti on private property (when the proper waivers have been signed). The City's Graffiti hotline telephone number is 510.494.4897.

Fence Materials: Wood, Stucco, Brick or Stone Veneer, and Paint

Techniques: Graffiti Paint Removal Solvents/Chemical Remover, Power wash, Sand or Soda Blas, Repainting

Figure 3: Fence Surface Treatment using paint, power wash and graffiti removal solvents

DESIGN STANDARDS & APPLICATION

By applying surface treatment to precast walls and wood fences, compatibility in materials and design can be achieved. This will give a consistent look along the City's streetscape.

The treatment shall be applied to fences that:

- Are fading in color.
- Have been subject to vandalism such as graffiti.
- Have minor structural damage or cracks.
- Do not match the original or updated color.

BEFORE

AFTER

Figure 4: Fence treatment using brick veneer

DESIGN STANDARDS & APPLICATION

Homeowners can repair walls with pre-approved repair detail for columns.

3. Column/Post Failure

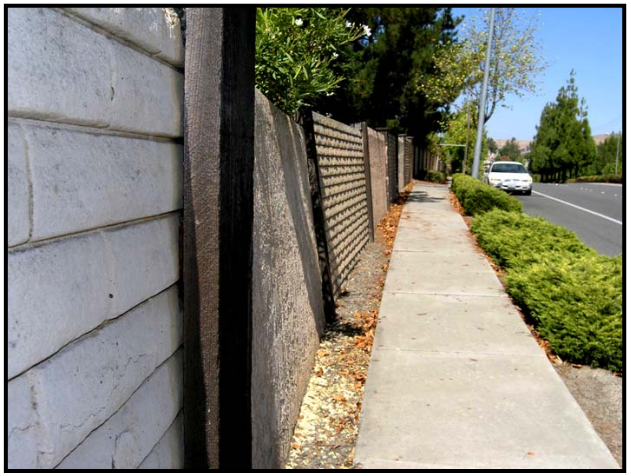

Figure 5: Fences with disjointed post and panel

Many of the walls which use the traditional steel post and concrete panel system are failing. Some of the precast panels have separated from the supporting post. This can be a potential hazard as there is a chance of collapse. In order to remedy this failure without incurring high costs, a simple method of repairing the posts can be used such as using a cast-in-place reinforced concrete pedestal to connect the precast wall panels, steel post and concrete pier foundation together. Please refer to the illustration of this repair detail provided in Appendix C of this document. This method of repair provides a reinforced metal post, which is the most common point of failure. The cost of repairing the wall using this method will be much less than replacing the entire wall.

Note: For wood fence post repair solutions, please refer to Appendix B attached at the end of this document.

DESIGN STANDARDS & APPLICATION

Homeowners can replace walls and fences to match the original materials and design of the wall/fence.

The intent of in-kind replacement is to match existing standards.

4. Panel Damage or Failure

Some fences and walls have been damaged by deteriorating posts or other factors. Over time some homeowners have added incompatible materials such as wood fences in between an expanse of precast walls creating a mismatched appearance. The intent of in-kind replacement is to standardize future replacements and to maintain a consistent look along the street.

When replacement work is allowed using an alternative material other than the original materials, the criteria for acceptable replacement material is primarily based on color, pattern, continuity of lines, overall appearance and durability of materials.

Wall/fence panel replacements can be done by using:

a. Precast walls to match existing walls (preferred solution)
b. Replacement with compatible wood fences (if allowed by original subdivision Conditions of Approval and approved by Planning Division)
c. Wood framing with approved exterior siding
d. Stucco replacement walls where appropriate
e. Block walls where appropriate

Figure 6: Incompatible Fence Materials

DESIGN STANDARDS & APPLICATION

Precast walls can be installed in order to match existing walls. Homeowners can hire a contractor who provide wall/fence installation services.

4a. Precast walls to match existing walls

Todays precast wall systems are manufactured of durable materials and brought to the site to be put in place, usually with cranes, although some systems can be installed manually. The panels are slipped into place between reinforced concrete footings. Exterior finishes and materials vary widely but should be chosen to match the original wall or other existing walls in the vicinity.

Although this is an expensive option, there is a large potential for savings through economies of scale. Contractors who do this type of work often have flexible pricing schedules, which decrease per linear foot if multiple adjoining property owners have the work done at the same time. This cost savings occurs because much of the labor, transportation, and equipment set-up costs are reduced if the contractor can do a larger job in one visit compared to coming back for several visits to the same street for neighboring jobs.

4b. Replacement with compatible wood fences

(if allowed by original subdivision Conditions of Approval and approved by Planning Division)

Wood fences can be custom made from various types of lumber or can be constructed from pre-assembled panels. Designs vary widely, but the most common type used along arterial roadways in Fremont is the “board on board” design style. The most popular material is redwood because it is the most resistant to rot, decay, and warping. Other choices include cedar and pressure treated lumber.

Figure 7: Existing Board on Board Style Fence along Blacow Rd.

DESIGN STANDARDS & APPLICATION

Under certain circumstances where wood fences are used along with precast walls, homeowners can use designs that match the existing walls in order to achieve a consistent look.

c. Wood framing with approved exterior siding

If used as a replacement for an existing precast wall, wooden fence replacements shall have post designs similar to the existing precast fences. Horizontal wooden boards shall be used between two posts to match the design of the existing precast walls. This method of replacement is feasible for smaller sections of damaged precast wall panels and costs comparatively less than using precast fence materials.

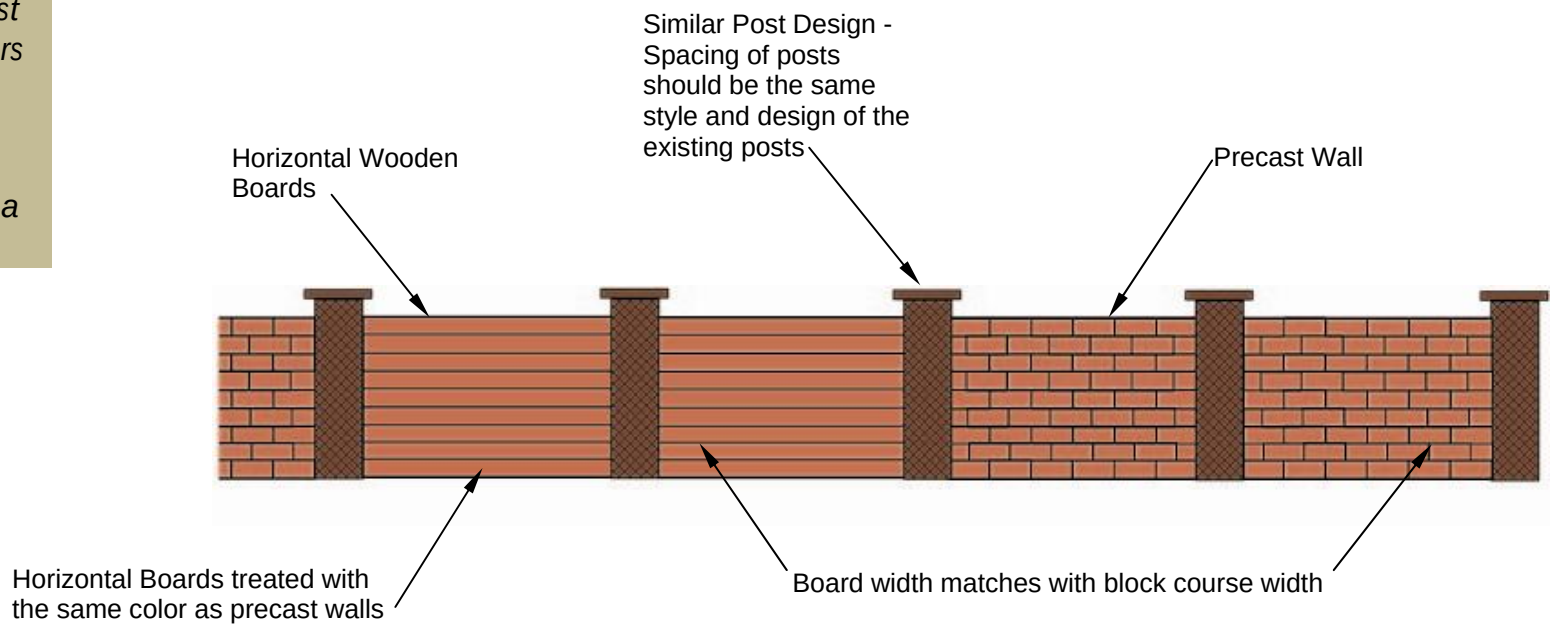

Figure 8: Typical wood replacement designed to match precast walls

DESIGN STANDARDS & APPLICATION

Stucco walls possess strength and have the look of masonry wall. Stucco walls are a great option for a beautiful yet subtle design for a residential or commercial application.

d. Stucco replacement walls where appropriate

Stucco walls are constructed by building an interior structure out of wood or concrete covered with a wire mesh and then covered with a stucco material. Stucco walls can have a wide variety of surface treatments from smooth finish or patterned. Color can be added to the stucco or the surface can be painted.

Stucco can be used as exterior plaster on outside walls. Stucco is plaster with a cement base that is typically applied in three layers over framed and solid walls.

Homeowners who want to install stucco walls can:

- Hire a contractor
- Match existing stucco walls

Figure 9: Stucco Wall Fence

Figure 10: Stucco Wall Finish Samples

DESIGN STANDARDS & APPLICATION

CMU block walls are strong and offer added security and can be used as a fence material. These walls are attractive, very durable and require low-maintenance.

e. Block walls where appropriate

Block walls, sometimes called Cinder Block Walls or Concrete Masonry Unit (CMU) walls are usually constructed with an 8”x8”x16” concrete block that makes up CMU walls. These blocks are installed on a foundation and use internal steel reinforcement. CMU block walls are also ideally suited to sound barrier applications with a transmission loss two times greater than wood fences.

Although this may seem like a desirable alternative to replace precast wall panels it is a very labor intensive process, which requires skilled workmanship, a continual pour-in-place concrete footing and approved engineering drawings. Check with local contractors to estimate cost before committing to this alternative.

Figure 11: Block Walls

DESIGN STANDARDS & APPLICATION

Landscaping is an effective way to improve the appearance of an existing or new wall.

5. Landscape adjacent to the right-of-way

Landscaping is often used between private walls and the public sidewalks to screen walls and fences.

Landscaping should be used to enhance the appearance of existing or new fences or walls for purposes of screening and privacy. Landscaping should not be used to hide structural imperfections of the fence or wall. The landscape design should consider the overall landscape along the street and create a cohesive appearance.

Irrigation will be required on the outside of the wall provided by the homeowner. This application works best when it is done with the initial construction of the fence. Some vines can compromise the integrity of the wall by constantly adding moisture to the surface.

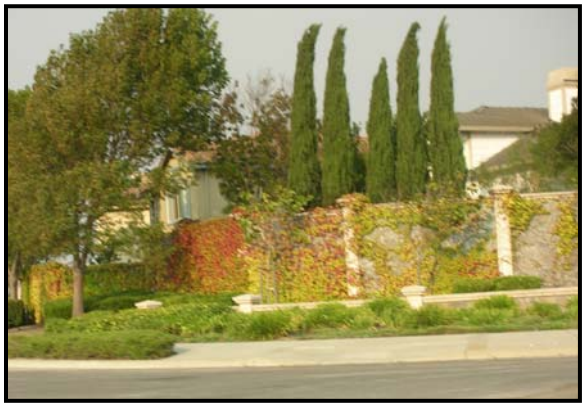

Figure 13: Existing Fence Landscaping

DESIGN STANDARDS & APPLICATION

Landscaping can be done in the following ways:

- *Ground cover (horizontal landscape)*
- *Shrubs*
- *Vines (vertical landscape)*
- *Trees*

Homeowners can select from the following list of vines that are appropriate for fences and walls:

a. *Blood Red Trumpetvine:* Blood Red Trumpetvine can grow up to 20'-30' tall. They have tall dense green leaflets with orange-red flowers that bloom all year in warm conditions. These grow in sun or part shade and can be used in fences, walls, and arbors.

b. *Boston Ivy:* This is also known as the "Japanese Ivy." It's a particularly good climber for covering large walls or fences, with the added bonus of a magnificent display of foliage color in autumn. The leaves are 3-lobed and turn brilliant shades of red, yellow and purple in autumn. When the plant loses its leaves in winter the brownish tracery of the stems blends with the grey/brown of the brushwood.

c. *Ficus Repens Creeping Fig:* This is a vigorous, self-clinging, evergreen vine that holds securely to any surface via aerial rootlets. Leaves are heart-shaped, forming an interesting pattern. They cover large areas quickly and form an excellent way to add character to a wall.

d. *Virginia Creeper:* This native perennial plant is a woody vine up to 60' long. It usually climbs up trees, shrubs, or fences, but sometimes sprawls across the ground, forming a ground cover up to 1' tall. The stems are initially green and hairless, but eventually they become brown and woody. Opposite from the leaves, are branched tendrils that often terminate into flattened pads. These pads can cling to tree bark, wooden fences, brick walls, and other rough surfaces. During the fall, the foliage becomes colorful, varying from burgundy to brilliant scarlet.

Some of the twining and coiling vines that can be used on fences with a slender support, wire string, or wire mesh are Honeysuckle, Jasminum, Hardenbergia, Solanum, Trachelospermum, and Wisteria. Clambering vines like Bougainvillea can be used on walls and fences as well with proper support.

APPENDIX A – BEFORE HIRING A FENCE CONTRACTOR

1. Make sure the contractor has a valid license that is current and active.
   The following link is provided to the Contractors State License Board (CSLB) for verification purposes:
   https://www2.cslb.ca.gov/onlineservices/CheckLicensell/checklicense.aspx
   The status of any license can also be checked by calling the Contractor's State License Board at 1-800-321-2752.
2. Ask for and check references of past customers or past job locations.
3. Request certificates of insurance from the contractor for worker's compensation (if the contractor has employees) and general liability. These can be sent to you and are free of charge from the insurance company.
4. Sign a contract with the contractor that states the specific work being done as well as the total cost of the job, including payment schedule. This is as much a protection for the customer as it is the contractor. It is against the law to require more than 10% down payment, or $1,000, whichever is less, on any job unless there are special order items. Be aware of anyone requesting more than this.
5. Apply for a City fence permit for fences taller than six feet in the side and rear yards and have the structural details reviewed by a plan-checker in any case if any portion of the fence is acting as a retaining wall. The owner or contractor may apply for a fence permit by submitting an application, a site plan of the parcel showing the fence placement, an elevation drawing depicting the new wall/fence or repair and how it connects to and matches the existing wall/fence, and a construction plan for the fence identifying materials and dimensions.

   A separate permit is required if any part of the fence does not border the applicant's property (the other owner). A homeowner's or property owner's association may apply for a permit to replace a fence abutting multiple yards adjoining a common area parcel owned by the association. The California Civil Code "Good Neighbor" laws do not require the City to share costs with private property owners for fences being replaced bordering public and private property. Structural documentation may be required for some fences. Permit fees for fences are based on the value of the work.

Ask to see and keep your copy of the job permit card for your records. Ensure that the final inspection is signed off by a city inspector before making final payment.

6. A Zoning Administrator Use Permit may be required for some fence heights.
7. All fence installations must comply with the placement, height and appearance requirements of the Fremont Municipal Code and California Building Code.
8. Encroachment permits must be obtained if cranes will be on the public right of way or public streets/sidewalks will be otherwise blocked.
9. For additional information on the City of Fremont's fence requirements, please visit the City website at: https://fremont.gov/561/Fence-Permit

APPENDIX B – A DO IT YOURSELF REPAIR GUIDE

Background:

Fences require maintenance. Conditions such as harsh sun, rain, heavy winds, water seepage, soil conditions etc. cause fences to deteriorate over time. The older a fence gets, the more problems it generates. Some fences fall apart during the initial years either due to faulty design, wrong materials or poor construction. Once they are over ten years old, they may fail just from exposure and lack of maintenance. A good rule of thumb is to replace a fence if repairs would cost more than 40% of a new fence.[1]

Some of the problems that cause fences to fail prematurely are listed as follows:

I. Design problems:

- Foundation not deep enough to support the wall
- Not enough support for line and corner posts
- Posts set too far apart
- No internal support (rebar) in block walls
- Wood in contact with grout and earth
- Poorly designed rail-to-post connections
- Fence or wall located too close to trees and root systems
- Lack of proper caps and water drainage devices

II. Material problems:

- Wrong kind of fasteners and nails
- Wrong lumber used, especially for posts
- Incorrect concrete, cement or mortar used
- Incorrect or inferior sealer or paint used
- Uncoated steel used for latches and hinges

III. Poor construction techniques:

- Lack of expansion joints or improperly-spaced expansion joints
- Improperly finished joints on block or brick walls
- Poor workmanship
- Use of mortar that's too dry or mixed more than two hours before use
- Unfinished weld joints on metal fences
- Improper stretching of fabric on wire mesh fences
- Over-tightening of screws and fasteners

IV. Maintenance Suggestions:

- Oil hinges regularly
- Seal or paint when needed
- Fix small problems as they develop
- Keep drainage holes and pipes clean

[1] McElroy, William. Fences & Retaining Walls. June 1990.

WOOD FENCE REPAIR SOLUTIONS

Fence Condition I: Disjointed Post Fence Repair

Wood fences that are disjointed with solid concrete posts or walls can be repaired using "L" brackets. Often the foundation of the block wall shifts, allowing the wall to tilt away from the wood fence. Another reason could be that the connection between the fence and the wall or post wasn't secure. In this case, the first thing to do is level the block wall and then use 4-inch 'L' brackets to fasten the wood rails to the wall or post. The next step is to drill holes in the block and install lead anchors, and use #8 screws. It would be a good idea to also renail the face boards. One should not nail a fence to brick as brick fractures easily and turns to powder. Instead it is always better to use L brackets with screws and anchors.

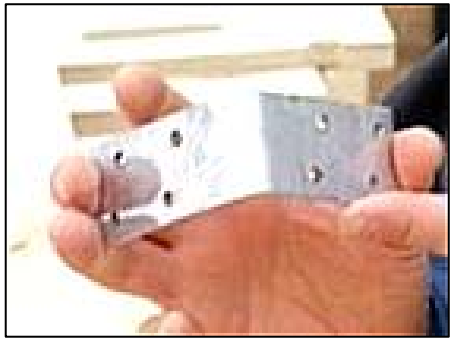

Figure B-1: L Bracket

Figure B-2: L Bracket clamped to post

Fence Condition II: Repair posts and panels that have shifted

In the illustration below, post D has shifted out of line with A and B and post C is loosened and tilted backward. In such cases, the best solution is to take the fence apart between posts A and B, dig a new post hole in line with them, then rebuild the fence. One can attach a new post to the old one by drilling in ½ inch bolts. Quick-set post concrete can keep the base of the new post in place. The new post can also be tapered at the top of the new post to drain off water.

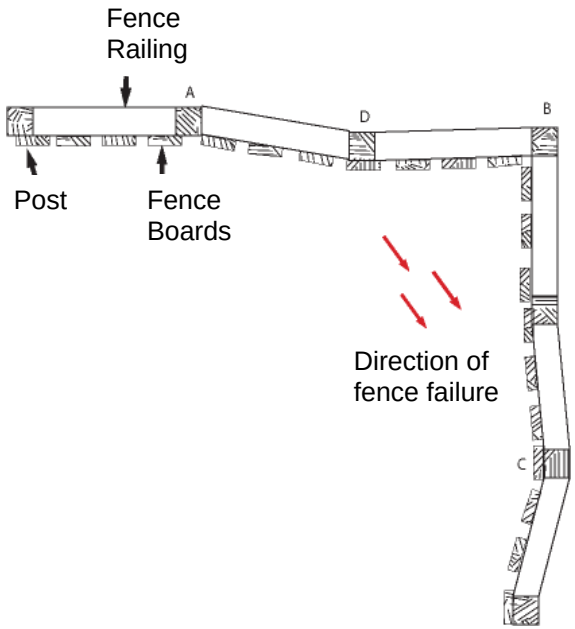

Figure B-3: Shifted Post and Panels

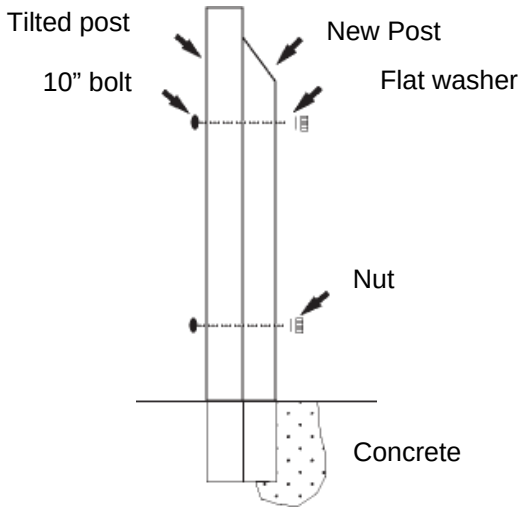

Figure B-4: Repair solution for shifted Post and Panels

Fence Condition III: Replacement of fence and wall components

Wall components such as caps can break over a period of time. When it becomes difficult to find a similar match cap, the best thing to do is to replace all the caps with the new ones. Otherwise, homeowners can use a product called *Fix All* (or equivalent) which is a cement/plaster for outdoor use and is available at most paint and hardware stores. *Fix All* can be used to fix block, brick and even lumber. *Fix All* can be used to fix pieces of the cap block back together and can be used with cement to fill in the gaps.

Fence Condition IV: Repair leaning wood fence post

In most cases, a leaning fence post does not have to include removal and replacement of the concrete pier that holds the rotted or broken post in place. In some cases, post replacement may not be required. However, if the rot at the post base extends more than 8 or 10 inches above the concrete pier, it is best to replace the post. Ideally, there must be 3 inches of concrete between the edge of the fence post and the outside edge of the pier.

A simple method of repair for leaning posts involves a pair of metal braces called fence-post-repair brackets. Fence-post-repair brackets are available in two sizes, $3^{1/2}$ and 4 inch. One size for rough-cut posts and another for finished ones. It usually takes time to repair the leaning fence posts if the fence boards rest between the posts. However, in some cases, temporary bracing may be needed to hold the post, some digging and cleaning away the dirt at the post base and at the top of the concrete pier, and removing and replacing a couple of fence boards. Sometimes the top rail needs to be reattached if it has separated from the leaning post.

First, a 2x4 is used to brace the fence and hold it in a plumb position until the repair is completed. Holding the fence in an upright position, wedge the low end of the 2x4 into the landscape and nail the other end of the brace to the fence post you intend to repair. Don't drive the nail all the way in. The brace is temporary and the nail will have to be removed once the repair has been made.

The next step is to remove fence boards that cover the area to be repaired. A block of wood should be used to buffer the blow of the hammer. Lay the block against the fence board and strike the block with the hammer. A flat pry bar can also be used.

With the post braced and the fence boards removed, shovel the dirt away and expose the base of the post and the top of the concrete pier. The

area should be swept clean so that the outline of the post in the concrete can be clearly seen. This is important because attempting to drive a fence-repair bracket in the wrong location can easily bend it. As the bracket is driven into place with the sledge hammer, it crushes the post and wedges itself into the concrete. The first bracket usually goes in easily, whereas the second is more difficult. This is because the first usually uses up all of the available space between the post and pier. Therefore, be prepared to apply more force to each blow of the sledge hammer to properly seat the second bracket.

At this point the brackets can be bolted, nailed or screwed into the post. Since the brackets are tightly wedged between the pier and the post, the method of attachment usually is not overly important. However, where substantial post damage exists, bolting is wise. With the brackets attached, replace the fence board(s), remove the temporary brace and refill the post hole.[2]

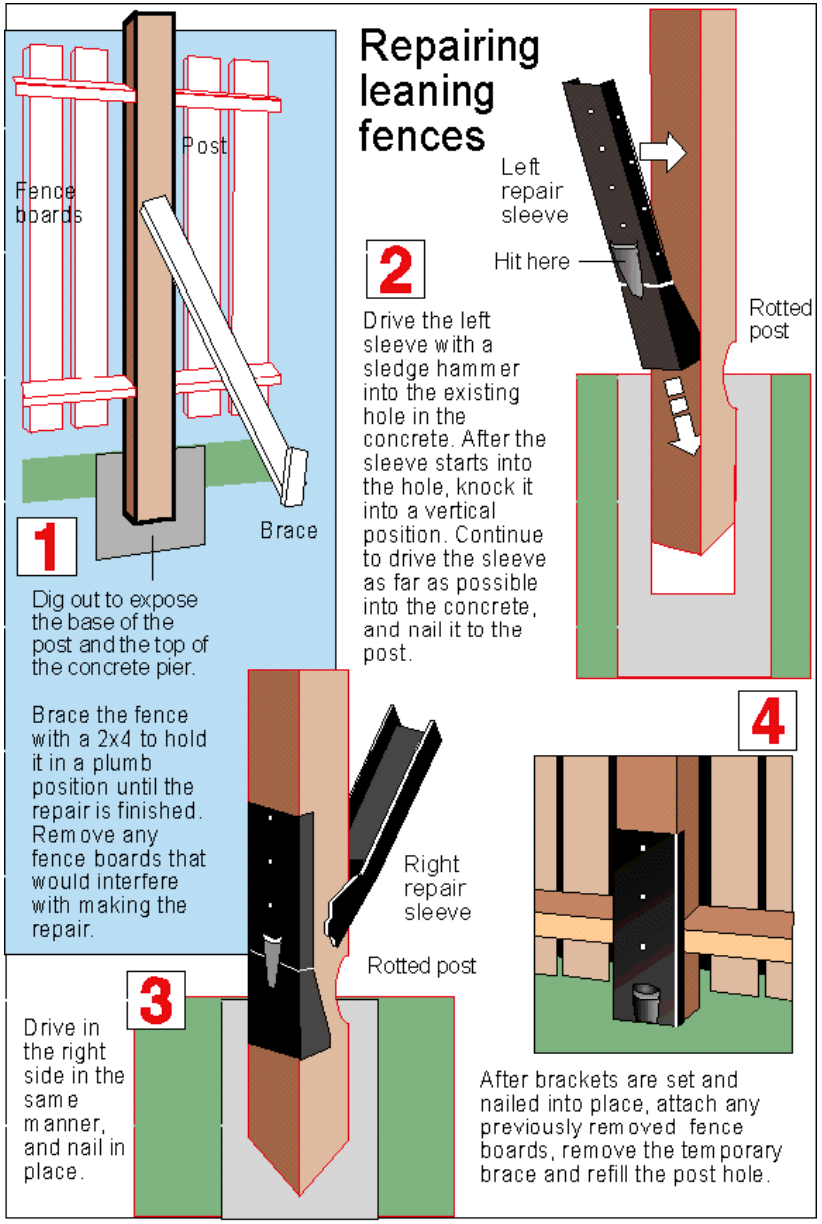

AP/ Stan Kohler

Figure B-4: Repair of leaning fences

[2] http://www.onthehouse.com/wp/19960226

Fence Condition V: Repair Wood Fence components[3]

Weather conditions such as extreme sun, wind, rain, snow, rot, and below-ground frost cause wood fences to deteriorate over time. Wood is most vulnerable to rotting. Hence, one should always repair wood fences with the most rot-resistant lumber one can afford. Pressure-treated lumber has been saturated with preservatives and lasts almost indefinitely, even with wood that has been buried in the ground. This type of wood is expensive, however. Cedar and redwood stand up well underground and are also costly.

a. Rotten Wood Posts

Posts that weren't properly treated or set in concrete typically rot away at ground level. Bottom rails and the bottoms of screening can suffer, too, especially if vegetation has been rubbing against them and trapping water. Carefully inspect fences at least once a year, paying particular attention to these areas. When you find a problem, correct it before the damage spreads. One weak post, for example, could pull down an entire fence.

b. Repairing Fence Rails

A rail that's pulled loose from one or more of its posts may or may not be salvageable, depending on how badly rotted the joint is. You may be able to mend the break with a 2x4 scrap or a couple of metal T-braces or you may have to replace the entire rail.

To repair a rail with a 2 x 4:

Step 1: Before you make repair, saturate the damaged areas and a 2x4 liberally with a wood preservative. This keeps the rot from spreading.

Step 2: To make a cleat to support the rail, make sure the rail is level, then fit a 2x4 snugly underneath. Nail the 2x4 to the post with galvanized nails. Drive a couple of nails down through the rail into the cleat.

Step 3: Carefully caulk the top and sides of the repair to keep out moisture.

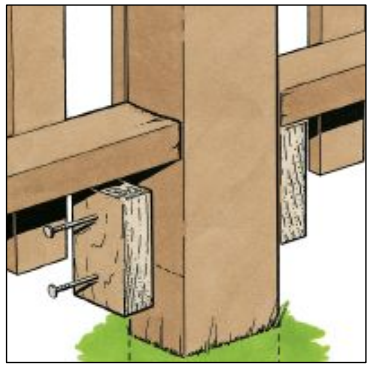

[3] http://www.howstuffworks.com/how-to-repair-a-wood-fence.htm

To repair a rail with T-braces:
Galvanized steel T-braces, available at most hardware stores and home improvement centers, are somewhat less conspicuous and often make a more lasting repair.

To use T-braces in rail repair:
Step 1: Level the rail, then drill pilot holes into the post and rail.
Step 2: Secure the T-braces to the rail with galvanized screws.
Step 3: Caulk the joint.
Step 4: Paint the T-braces to match the fence.

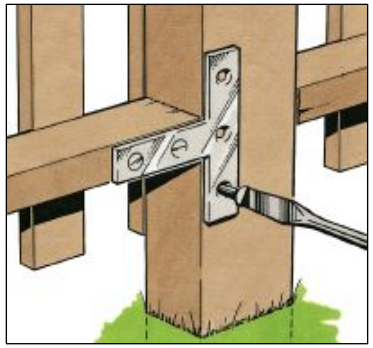

Figure B-6: Rail repair using a T-brace

c. Repairing Fence Sections

If the entire rail needs to be replaced, dismantle that section of fence and rebuild it as explained below.
Step 1: Cut 2x4 rails to fit flat along the tops of the posts. The rails can extend from post to post, or a rail can span two sections. Measure and cut each rail individually to allow for slight variations in the fence post spacing. Butt the ends of the rails tightly together. Then, beginning at one end of the fence line, nail rails in place with two 10d galvanized common nails at the ends of each rail.
Step 2: Measure and cut the 2x4 bottom rail to fit snugly between each pair of posts. Position the rails flat between the posts, anywhere from slightly above grade level to 12 inches up. Nail the bottom rails into place with a 10d galvanized nail driven at an angle through the fence post and into the end of the rail on each side. Use a level to keep rails even.
Step 3: Measure and cut the fence boards. They should be of uniform length, as long as the distance from the bottom of the bottom rail to the top of the top rail, as measured at one of the posts. Starting at one end, nail boards to one side of the rails, leaving space equal to a single board width between each. Secure each board to the rails with two 8d galvanized nails at the top and two at the bottom. Nail tops first, flush with the top, then nail the bottoms, pulling or pushing the bottom rail into alignment as you go. If your fence will have boards on both sides, nail up all the boards on one side first, then nail alternate boards to other side of the rails, positioning boards to cover spaces left by boards on opposite side.

d. Repairing Fence Screening

Replacing broken or rotted screening takes only a few hours and simple carpentry skills. To replace rotted screening:

Step 1: Measure the unbroken piece to get the correct length and width for the new piece or pieces you'll need. Use lumber that's the same width as the old screening, or rip boards to the proper width with a handsaw or power saw. Check all the cuts with a carpenters' square before you make them.

Step 2: If you're replacing pickets or other curve-top screening, set cut the board against an unbroken picket and trace the top onto a new board. Make these cuts with a saber, coping, or keyhole saw. If the fence is painted, give the new screening a coat of top-quality exterior primer; for natural wood fences, stain the new boards to match.

Step 3: Remove broken pieces by hammering and prying them away from the rails. Pull out any nails.

Step 4: Set the new board or picket against the rails, align it, and nail it firmly into place with galvanized 8d nails.

Step 5: Paint new pieces to match the rest of fence.

e. Repairing Fence Posts

When a post begins to wobble, determine the cause before you make the repair. If the post is rotted or broken, you may be able to repair it with a pair of splints or you may have to replace the entire post. If the post seems intact but has come loose in its hole, a pair of stakes or, better yet, a new concrete base can steady the post.

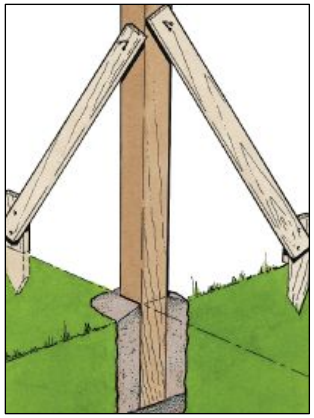

Figure B-7: Repair of wood fence posts

To stake a post:

Step 1: Select a pair of 2x4s that extend at least 18 inches above ground. Use only pressure-treated lumber, cedar, or clear all-heart redwood.

Step 2: Bevel cut one end of each 2x4, and drive them into the ground along opposite sides of post.

Step 3: Bore two holes through both 2x4s and the post, then bolt everything together with galvanized carriage bolts.

For a more permanent cure, dig out around the post, plumb it with temporary braces, and pour concrete around the post's base. Prepare premixed concrete, stir it well, and pour it into the hole around the post. Slice the concrete mix periodically with a spade as you pour to eliminate any air pockets. At the top of the hole, mound concrete around the base of the post to shed water.

APPENDIX C – PRECAST SOUND WALL REPAIR

Wall Condition I: Precast concrete wall post repair

Figure C-1 illustrates a repair option for precast sound walls that have disjointed posts and panels. The method uses a cast-in-place reinforced concrete pedestal to connect the precast wall panels, steel post and concrete pier foundation together. However, it should be noted that this repair method is intended to reinforce the existing wall only. It does not and is not required to meet current seismic codes. It is estimated that the overall cost of this method of repair will be lesser than replacing the entire wall.

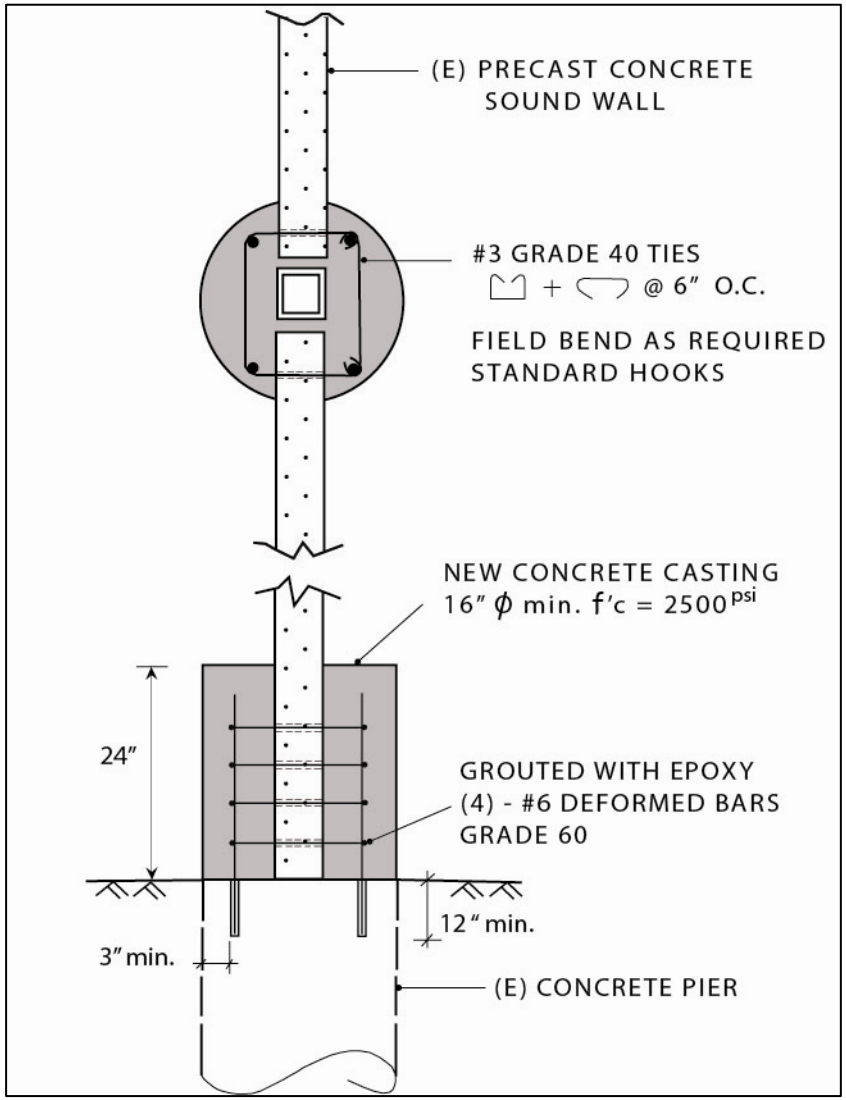

Figure C-1: Precast Concrete Wall Post Repair

APPENDIX D – HOW TO FIND A WALL/FENCE CONTRACTOR

Homeowners may need a contractor to build or repair their fences or walls because of the expertise and equipment required for the job. Fence materials vary and certain companies specialize in their installation.

In order to locate a fence contractor, homeowners can look into the following resources:

1. Phone Book (Yellow Pages)
2. Internet (search for “fence contractors”)
3. Ask for referrals from your neighbors or co-workers
4. Newspapers