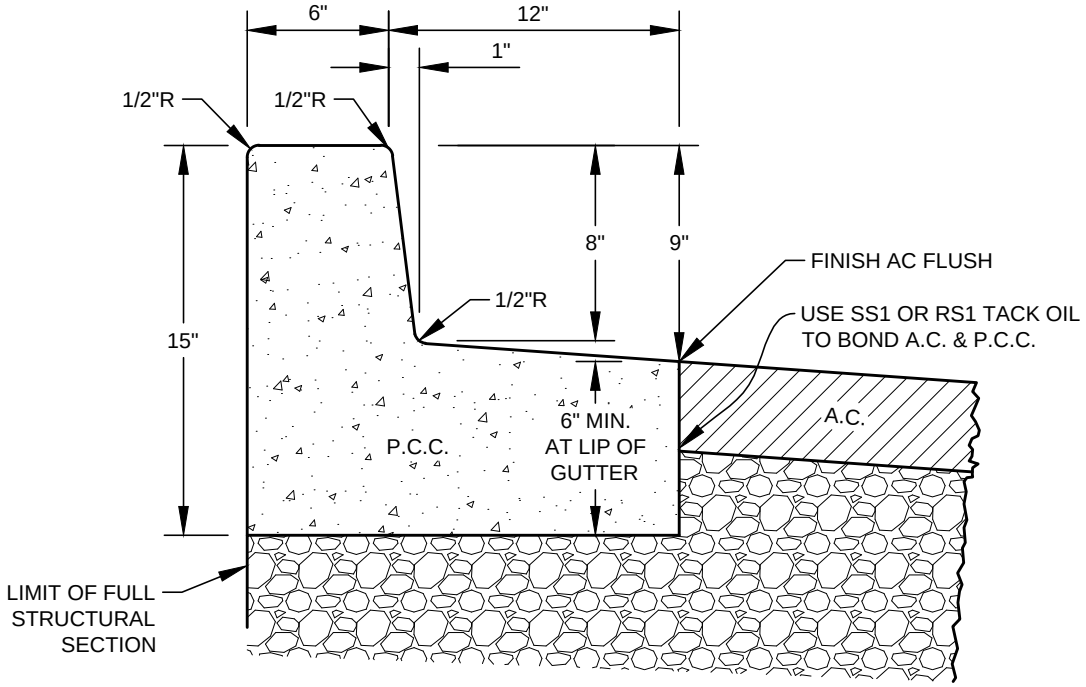

8" MEDIAN CURB AND GUTTER

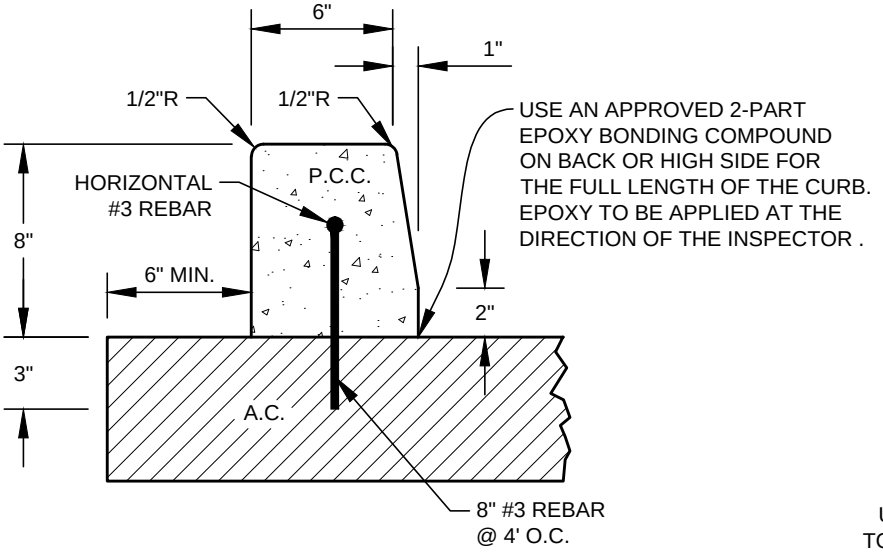

8" MEDIAN EXTRUDED CURB

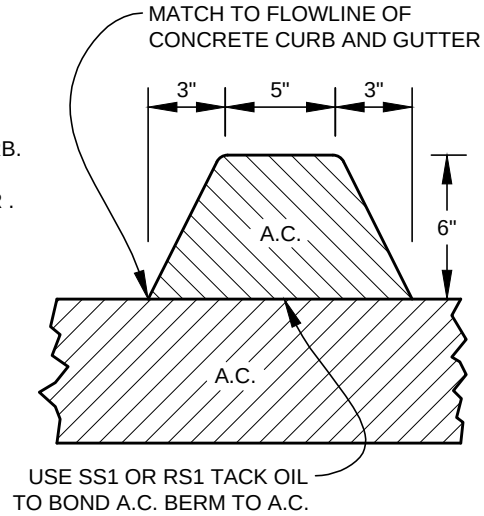

6" EXTRUDED A.C. BERM

DOWEL NOTES:

1. PLACE 8" #3 DOWELS (3" EMBEDDED INTO THE AC) 4' ON CENTER PRIOR TO EXTRUDING CURB AND WITH #3 REBAR TIED HORIZONTALLY ON TOP CONNECTING DOWELS.

2. DOWELS MUST BE A TIGHT FIT OR EPOXIED INTO THE DOWEL HOLE. PLACE DEEP JOINTS EVERY 8' ON CENTER.

APPR	REVISION	DATE	CITY OF FREMONT	DATE APPROVED BY CITY COUNCIL
KC	GENERAL REVISION	7/22	STANDARD DETAILS	4/11/2006
			MISCELLANEOUS	RESOLUTION NO. 2006-31
			CURB AND GUTTER DETAILS	CITY ENGINEER

FILE NO.	SCALE	DRAWN	CHECKED	DATE	DWG NO.	
SD-07-22.DWG	NOT TO SCALE	DC	KC	3/14/2006	SD-7	1 OF 1